SDA SERIES SOLID STATE RELAY

SDA-200C025J-1Z
SDA-200C040J-1Z
SDA-200C050J-1Z
SDA-200C075J-1Z
SDA-200C090J-1Z
SDA-200C100J-1Z

DC Control AC Loading S.S.R

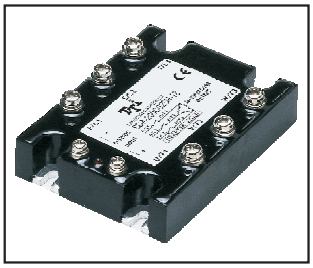

Specifications

MODEL SERIES NO.	CONTROL VOLTAGE	MUST TURN OFF VOLTAGE	INPUT IMPEDANCE	LOADING CURRENT	LOADING VOLTAGE	MIN BLOCKING VOLTAGE	MAX OFF-STATE LEAKAGE	FREQUENCY RANGE	MAX 1-CYCLE PEAK SURGE
SDA-200C025J-1Z	5 - 32 VDC	MAX 3.0 VDC	1.5 KΩ	25A	24 ~ 280VAC	600VAC	LESS 10 mA	47-70HZ	250A
SDA-200C040J-1Z	5 - 32 VDC	MAX 3.0 VDC	1.5 KΩ	40A	24 ~ 280VAC	600VAC	LESS 10 mA	47-70HZ	400A
SDA-200C050J-1Z	5 - 32 VDC	MAX 3.0 VDC	1.5 KΩ	50A	24 ~ 280VAC	600VAC	LESS 10 mA	47-70HZ	500A
SDA-200C075J-1Z	5 - 32 VDC	MAX 3.0 VDC	1.5 KΩ	75A	24 ~ 280VAC	600VAC	LESS 10 mA	47-70HZ	750A
SDA-200C090J-1Z	5 - 32 VDC	MAX 3.0 VDC	1.5 KΩ	90A	24 ~ 280VAC	600VAC	LESS 10 mA	47-70HZ	900A
SDA-200C100J-1Z	5 - 32 VDC	MAX 3.0 VDC	1.5 KΩ	100A	24 ~ 280VAC	600VAC	LESS 10 mA	47-70HZ	1000A

MODEL SERIES NO.	MAX OFF STATE dv/dt	MAX ON-STATE VOLTAGE DROP	ISOLATE IMPEDENCE	DIELECTRIC STRENGTH INPUT-OUTPUT	DIELECTRIC STRENGTH INPUT,OUTPUT-CASE	TURN ON TIME	TURN OFF TIME	CAPACITANCE IN-OUT	WEIGHT (g)
SDA-200C025J-1Z	500 V/μ sec	1.6Vrms	10^9 Ω	4000 VACrms	4000 VACrms	LESS 2 msec	LESS ½ AC CYCLE	LESS 473 PF	400 g
SDA-200C040J-1Z	500 V/μ sec	1.6Vrms	10^9 Ω	4000 VACrms	4000 VACrms	LESS 2 msec	LESS ½ AC CYCLE	LESS 473 PF	400 g
SDA-200C050J-1Z	500 V/μ sec	1.6Vrms	10^9 Ω	4000 VACrms	4000 VACrms	LESS 2 msec	LESS ½ AC CYCLE	LESS 473 PF	400 g
SDA-200C075J-1Z	500 V/μ sec	1.6Vrms	10^9 Ω	4000 VACrms	4000 VACrms	LESS 2 msec	LESS ½ AC CYCLE	LESS 473 PF	400 g
SDA-200C090J-1Z	500 V/μ sec	1.6Vrms	10^9 Ω	4000 VACrms	4000 VACrms	LESS 2 msec	LESS ½ AC CYCLE	LESS 473 PF	400 g
SDA-200C100J-1Z	500 V/μ sec	1.6Vrms	10^9 Ω	4000 VACrms	4000 VACrms	LESS 2 msec	LESS ½ AC CYCLE	LESS 473 PF	400 g

Parts No.

S DA - 200 C 025 J - 1 Z

- Switching Type : Z = Zero Crossing
- Packing : 1 = Screw Type
- Phase : J = Hearter Load (Three-Phase Two Line)
- Loading Current : 025 = 25A,040 = 40A,050 = 50A
  075 = 75A,090 = 90A,100 = 100A
- Control Voltage : C = 5-32VDC
- Loading Voltage : 200 = 24~280VAC
- Control Type : DA = DC Control AC
- S = S.S.R

Outline Dimensions(Unit : mm)

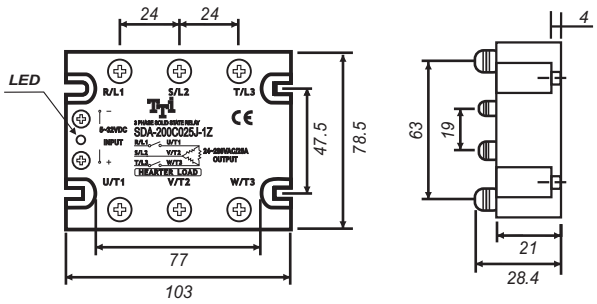

Equivalent Circuit

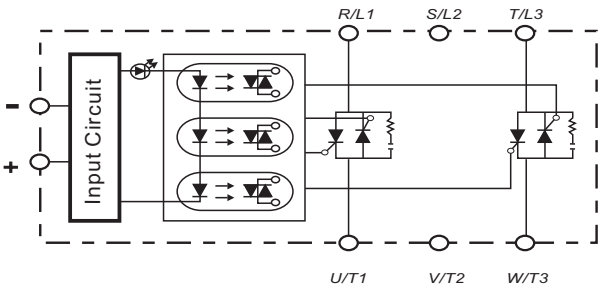

Example : 3Ø S.S.R Application

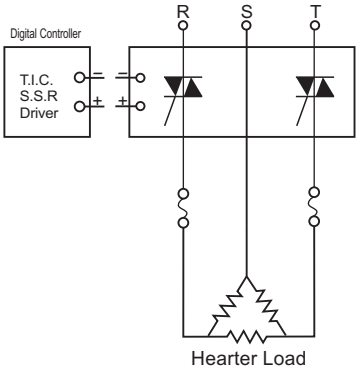
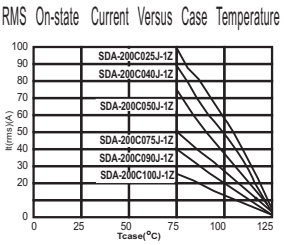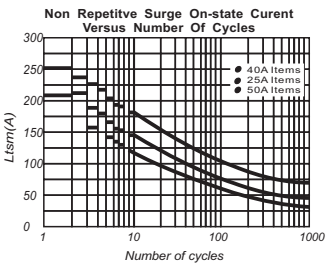
Characteristic Curves